PHONE: 516.328.3300 • FAX: 516.326.8827 • WWW.SDP-SI.COM

THIS ISEL BALL NUT IS PATENTED

Metric 0 10

› MATERIAL:

Ball Nut - Steel, Cf 53, ground, polished and hardened to HRC 62 ± 2

› SPECIFICATIONS:

Ball nut is 50 mm long by 28 mm diameter.
2 optional mounting brackets allow for flange mounting or base mounting. Both feature standard lubrication ports and are made of steel with a black oxide finish.
Available in 2.5, 5, 10 and 20 mm pitch.
Repeatability < 0.01 mm, accuracy < 0.1 mm/ 300 mm when used with our sleeve.
Optional wipers available.
Compatible with 16 mm diameter ball screws.
See index under **Ball Screws.**

Produce greater than 90% efficiency in converting rotary to linear or linear to rotary motion.

Fig. 1

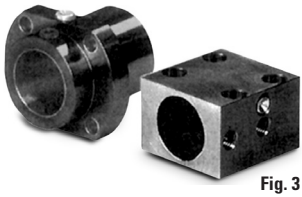

Fig. 2

Fig. 3

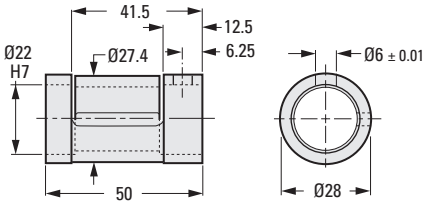

Fig. 1

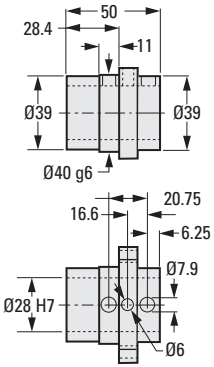

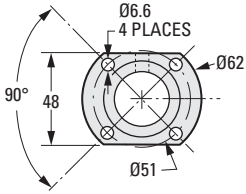

Fig. 2

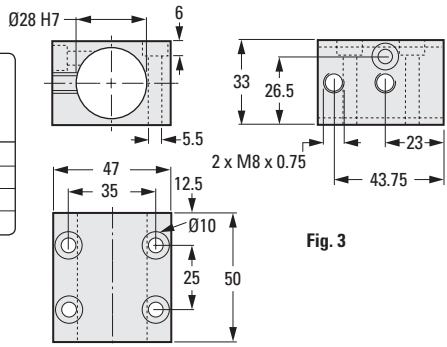

Fig. 3

METRIC COMPONENT	
Catalog Number Fig. 1	**Pitch**
S6652HM2135025	2.5
S6652HM2135050	5
S6652HM2135100	10
S6652HM2135200	20

Catalog Number
FLANGE MOUNTING BLOCK **(Fig. 2)** **S6652HMF2135**
BASE MOUNTING BLOCK **(Fig. 3)** **S6652HMB2135**
WIPERS (not shown) **S6652HMW6135**